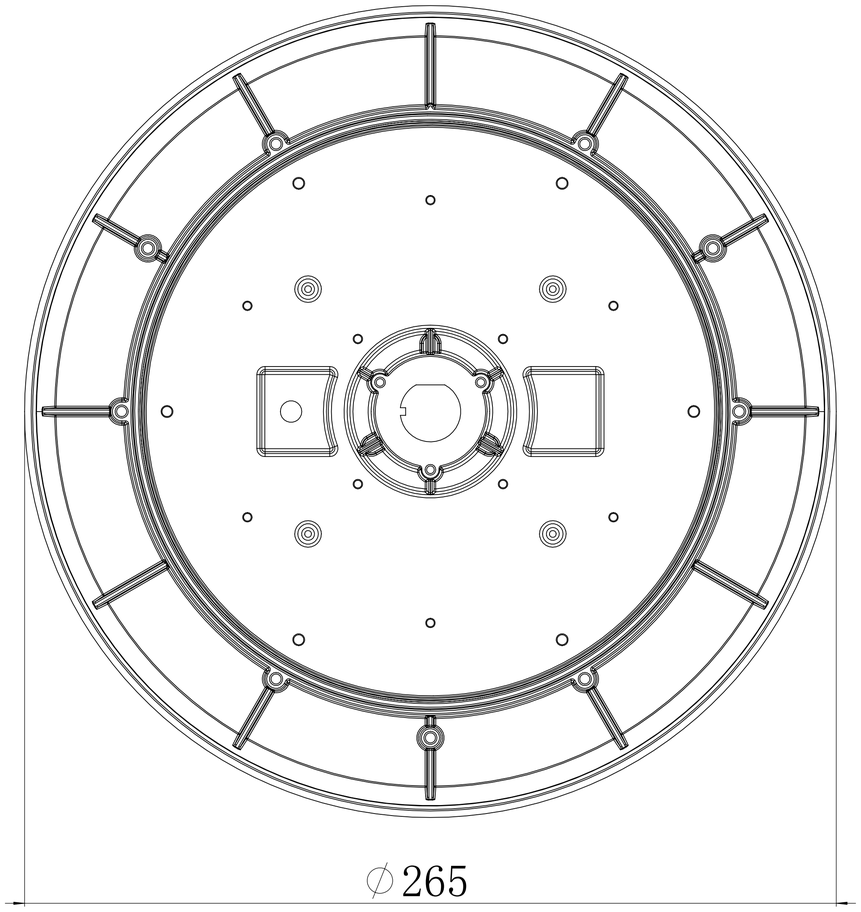
∅265

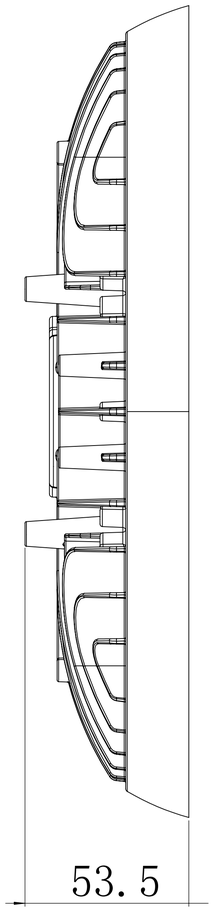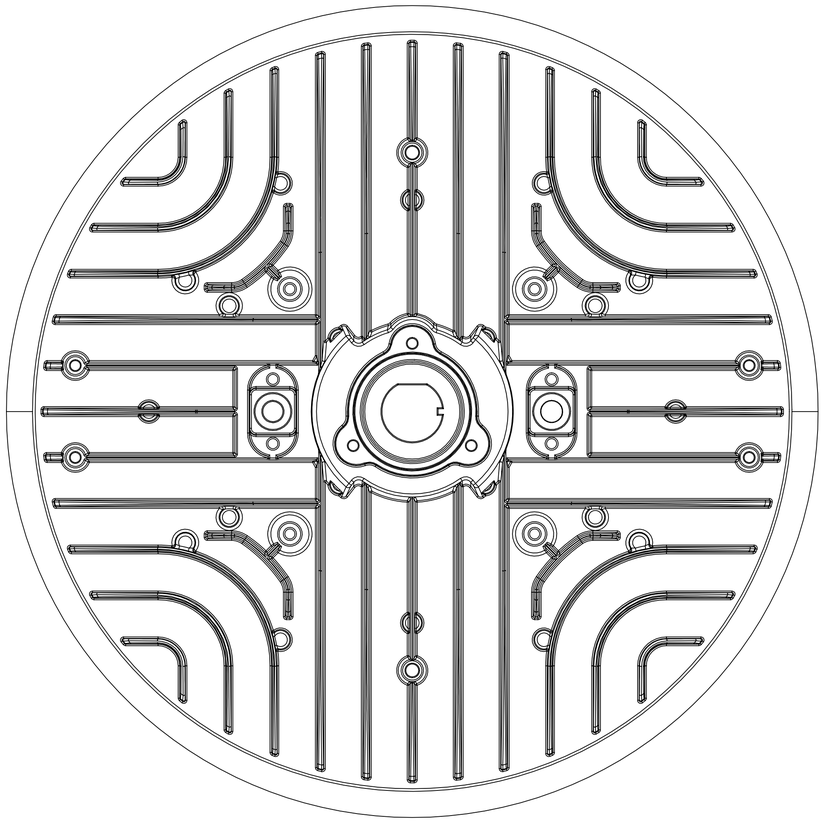
53.5